Sunbeam Alpine
Series III, IV, and V Fuel & Temperature Gauges

by Michael Hartman and Thomas Hayden

Version 1.4
May 9, 2018

The Circuit

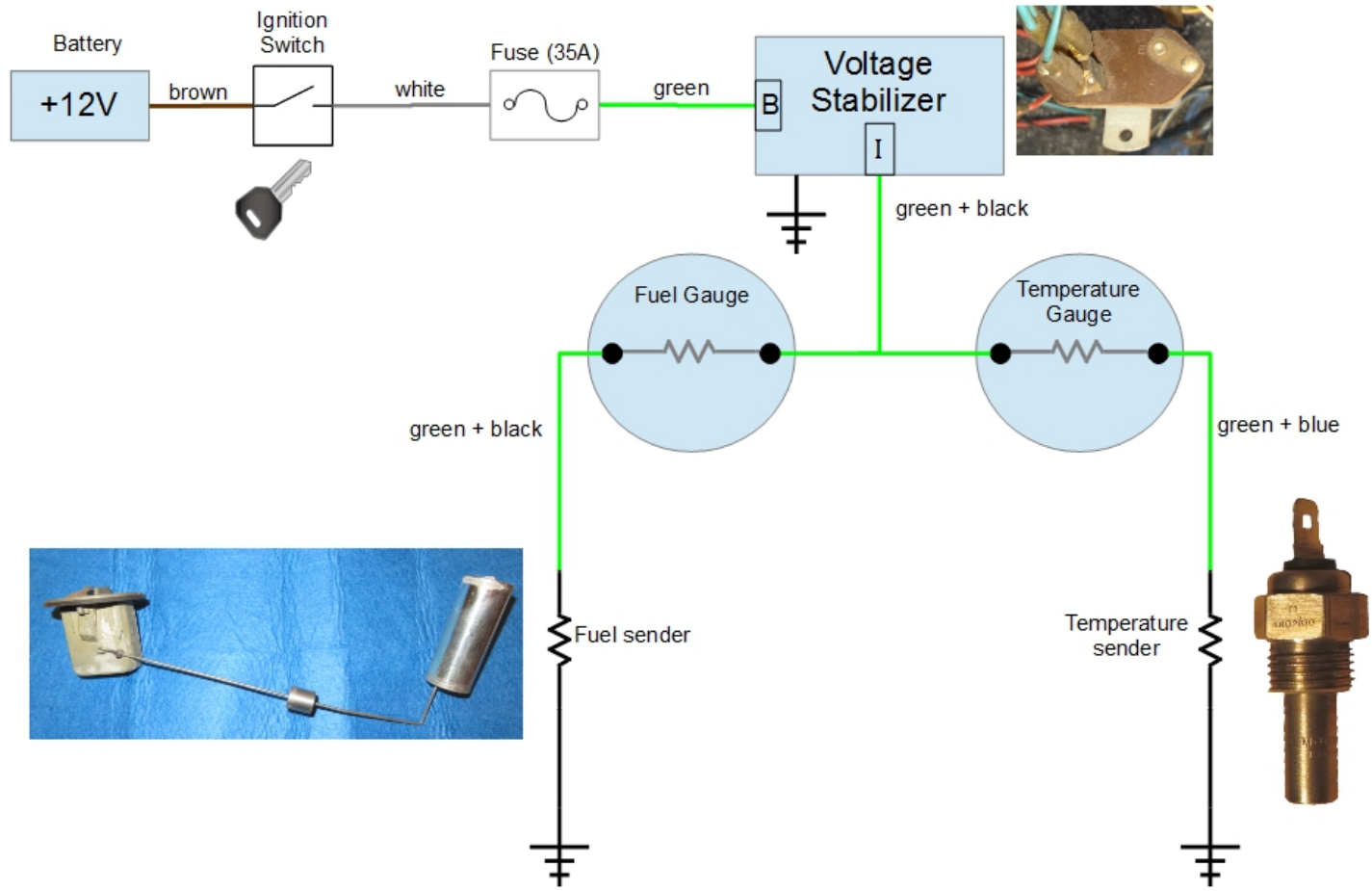

Illustration 1: Temperature & Fuel Gauge Circuits (Series V)

Example Gauge

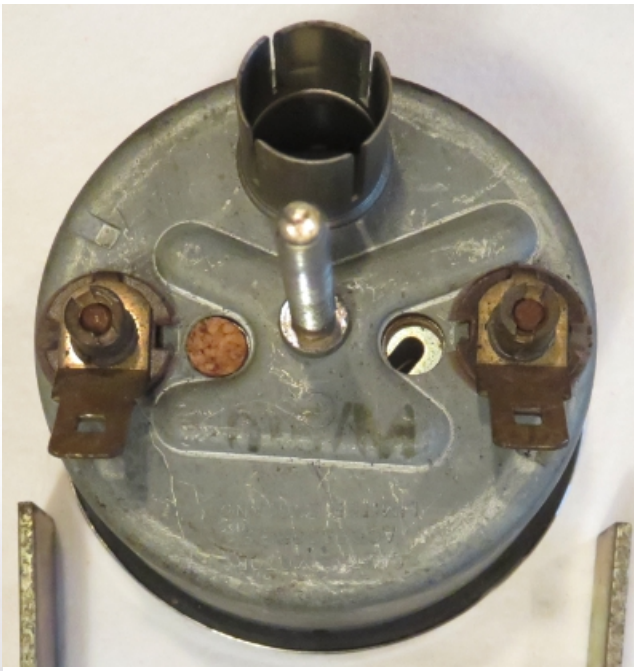

Operation

A fuel sender or temperature sender varies its resistance to indicate the condition it is measuring. The fuel sender and temperature sender are designed to provide the same resistance values for the same conditions. E.g. each sender will provide 68 ohms resistance at its mid-point (i.e. fuel tank half full / temperature at 85ºC). The sender resistances do not change in a linear manner as the senders go from low (i.e. empty or cold) to high (i.e. full or hot).

The fuel gauge and temperature gauge are identical internally. Only the face plate is different. The gauge needle moves based on how much heat is being generated by the current flowing through the heating element in the gauge.

The gauges are wired in series with the senders. The sum of the resistance in the gauge and the sender determine how much current will flow through the gauge. The voltage drop across the gauge and the amount of current flowing through the gauge determine how much heat is being generated within the gauge.

Joules Heating - Direct Current
The most general and fundamental formula for Joules heating is:

$$P = (V_A - V_B)\, I$$

where

- P is the power (energy per unit time) converted from electrical energy to thermal energy,
- I is the current traveling through the resistor,
- $V_A - V_B$ is the voltage drop across the resistor.

Ohm's law dictates that the voltage, resistance, and current are related. In the gauge system in these Alpines, the power for the gauges is supplied from the “Voltage Stabilizer” which maintains a voltage of 10.1 V. The voltage when the car is not running is the battery voltage, which is 12.6V. When the car is running, the voltage is around

14.4V.

If the voltage supplied to the fuel and temperature gauges varied, the current flowing through the gauges would vary as well. That would result in different gauge readings even though the sender resistance did not change. Hence the reason for the voltage stabilizer. An original or solid state voltage stabilizer emits a constant amount of energy over an interval of time, regardless of the car's voltage level being 12.6V or 14.4V.

Troubleshooting Issues

Symptom	**Possible Causes**
Both the Temperature and Fuel gauge do not register any reading (when the engine is not cold and the fuel tank is not empty).	1. Fuse 2. Voltage Stabilizer 3. Voltage Stabilizer to gauges connection issue 4. Gauges to senders connection issues (unlikely) 5. Both senders have issues or lack grounds (unlikely) 6. Both gauges have issues (unlikely)
One gauge reads ok and other gauge does not register.	1. Voltage Stabilizer to gauge connection issue. 2. Gauge to sender connection issue. 3. Sender / sender ground issue.
One gauge reads ok and other gauge reads high.	1. Sender issue.
Both the Temperature and Fuel gauges read higher than expected.	1. Voltage stabilizer producing too much energy - a bad stabilizer or the stabilizer is not grounded. 2. Both gauges have issues (unlikely) 3. Both senders providing less resistance than expected (unlikely)
Both the Temperature and Fuel gauges read lower than expected.	1. Voltage stabilizer is not producing enough energy. 2. Both gauges have issues (unlikely) 3. Both senders providing higher resistance than expected (unlikely)
Fuel gauge sometimes reads ok and sometimes shows empty.	1. Fuel sender issue. Most likely the issue is either intermittent contact between the wiper arm and wire windings inside the sender, or the sender has a flaky ground connection. (See document referenced in the Fuel Sender section.) 2. Gauge to sender flaky connection (unlikely)
Gauge needle does not return fully to the left when the ignition is turned off.	1. The gauge needle is binding inside the gauge. Remove gauge from car, open up the gauge, and address the binding issue.

Fuse

Issues with the fuse or fuse circuit will manifest itself as no wiper motor and the fuel gauge and temperature gauge read fully empty / cold (because the voltage stabilizer will receive no power).

If the wiper motor works, the voltage stabilizer probably has a power supply. To directly test:

1. Disconnect the supply to the ignition coil (to prevent cooking it).
2. Turn the ignition on.
3. Verify the green wires connected to the stabilizer have ~12.6 volts. (If you disconnect the wires from the

stabilizer, only one of the two wires will have a voltage, as the connector on the stabilizer is a junction.)

If you do not see ~12.6V, the Fuse might be blown, or there may be a bad connection between the fuse and fuse box, or the connections to/from the fuse box.

Original Voltage Stabilizer

The voltage stabilizer is mounted just behind the speedometer gauge. See photo below. The voltage stabilizer needs to be mounted with the mounting bracket in a vertical orientation, so the main housing body is parallel to the ground.

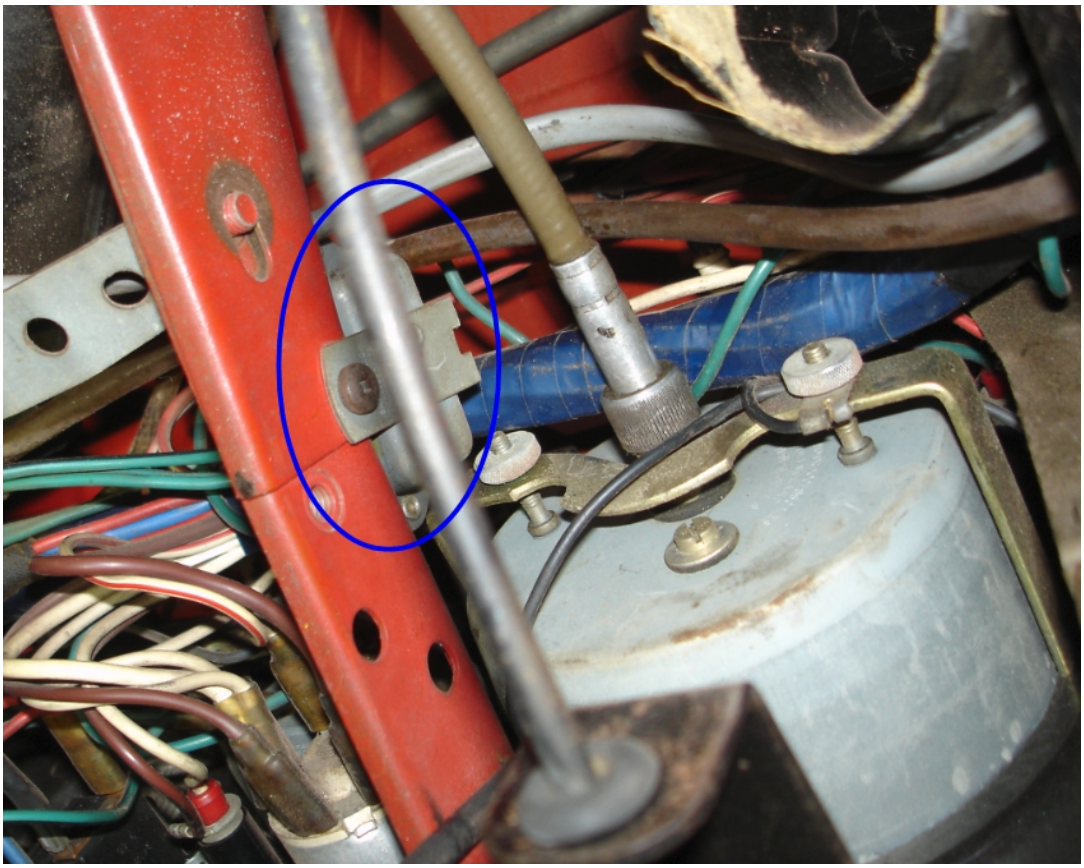

Illustration 2: Voltage Stabilizer Mounting Location

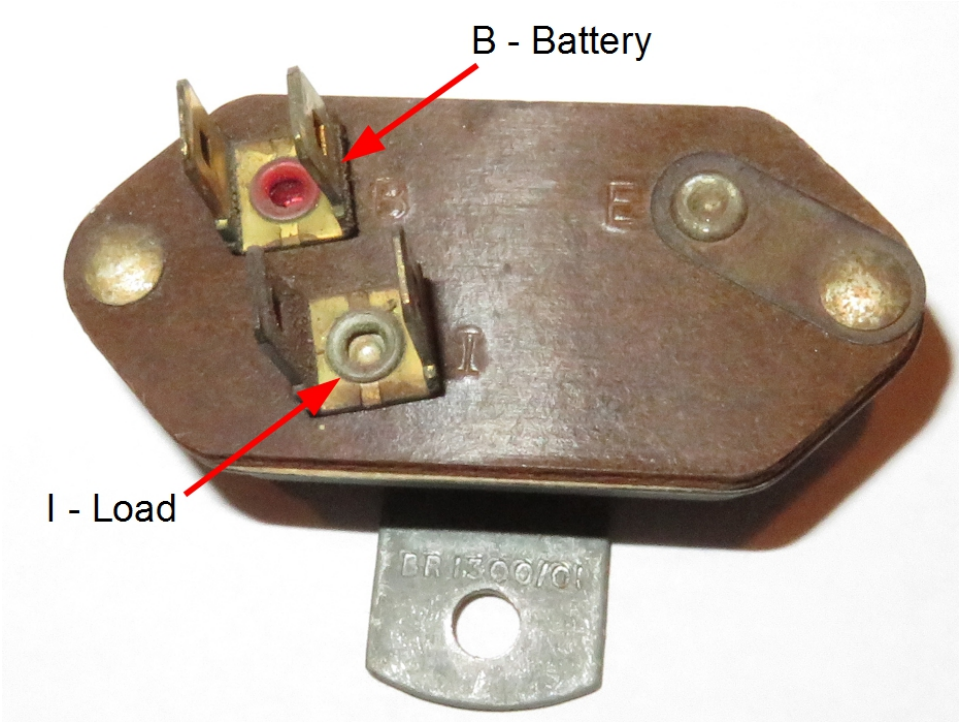

Illustration 3: Original Smiths BR1300/01 Voltage Stabilizer

The “B” connector is the supply voltage. The “I” connector (Load) goes to the Temperature and Fuel gauges. The metal housing / mounting bracket provides the ground.

Here is a photo showing how the wires connect to an original voltage stabilizer.

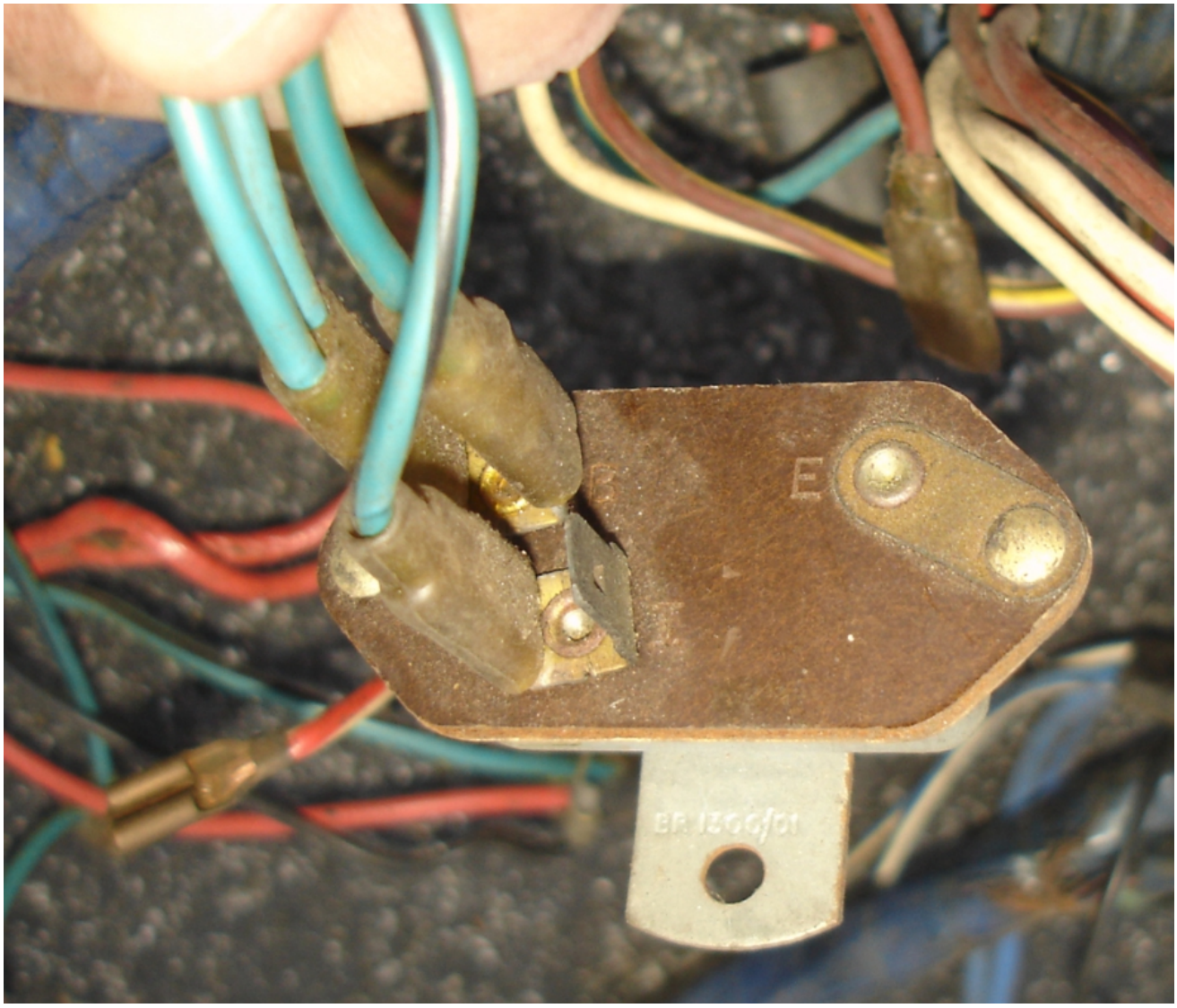

There are two wire connections on the "B" terminal (one connector with a single green wire and one connector with two green wires). There is a single wire connection on the "I" terminal (green + black wire) that goes to both gauges.

Original voltage stabilizers have a bi-metal thermal construction which cycles on and off a couple times per second, resulting in an output that is equivalent to 10.1V DC. Ensure the Fuse is good before testing the voltage stabilizer. To test the voltage stabilizer:

1. The voltage stabilizer needs a good ground. It is grounded by its mounting screw. Test the resistance of the voltage stabilizer metal housing to a chassis ground. The resistance should be less than 1 ohm.
2. Disconnect the supply to the ignition coil (to prevent cooking the coil).
3. Disconnect the green + black wire at the temperature gauge.
4. Turn the ignition on.
5. After a few seconds, the green+black wire should start to cycle on & off around twice per second. A digital multi-meter will likely show a random sequence of values. An analog multi-meter will ping pong back and forth between ~12V and 0V. Or connect a 12V test lamp and it will flash on and off around twice per second.

If there is no voltage present at the green+black wire, then the voltage stabilizer is bad. If there is a constant

voltage at the green+black wire, or the 12V test lamp stays lit constantly (does not cycle on and off,) then the voltage stabilizer is bad.

Solid State Voltage Stabilizer

Solid state voltage stabilizers produce 10.0V DC. To test:

1. Disconnect the supply to the ignition coil (to prevent cooking the coil).
2. Disconnect the green + black wire at the temperature gauge.
3. Turn the ignition on.
4. Verify the green + black wire has 10.0V.

Gauge

Resistance Check

1. At the gauge, disconnect the wires from the sender and the voltage stabilizer.
2. Verify the resistance across the two connectors on the gauge is ~61 ohms.

Direct Ground Test

If the voltage stabilizer works, another test is to replace the sender with a direct ground connection:

1. Disconnect the supply to the ignition coil (to prevent cooking it).
2. Replace the sender with a ground connection. Either:
   a) Disconnect the sender wire at the gauge. Then ground the gauge connector to which the sender was attached. Or
   b) Disconnect the sender wire from the sender. Then ground the disconnected sender wire.
3. Turn the ignition on.
4. Verify the gauge begins moving fairly fast towards full / hot.
5. Turn off the ignition before the gauge needle is pinned to the right.

Gauge Calibration Quick Test

Temporarily rewire both gauges so they are wired in series with each other. See diagram below. This results in each gauge seeing the same amount of current as when the sender has 61 ohms.

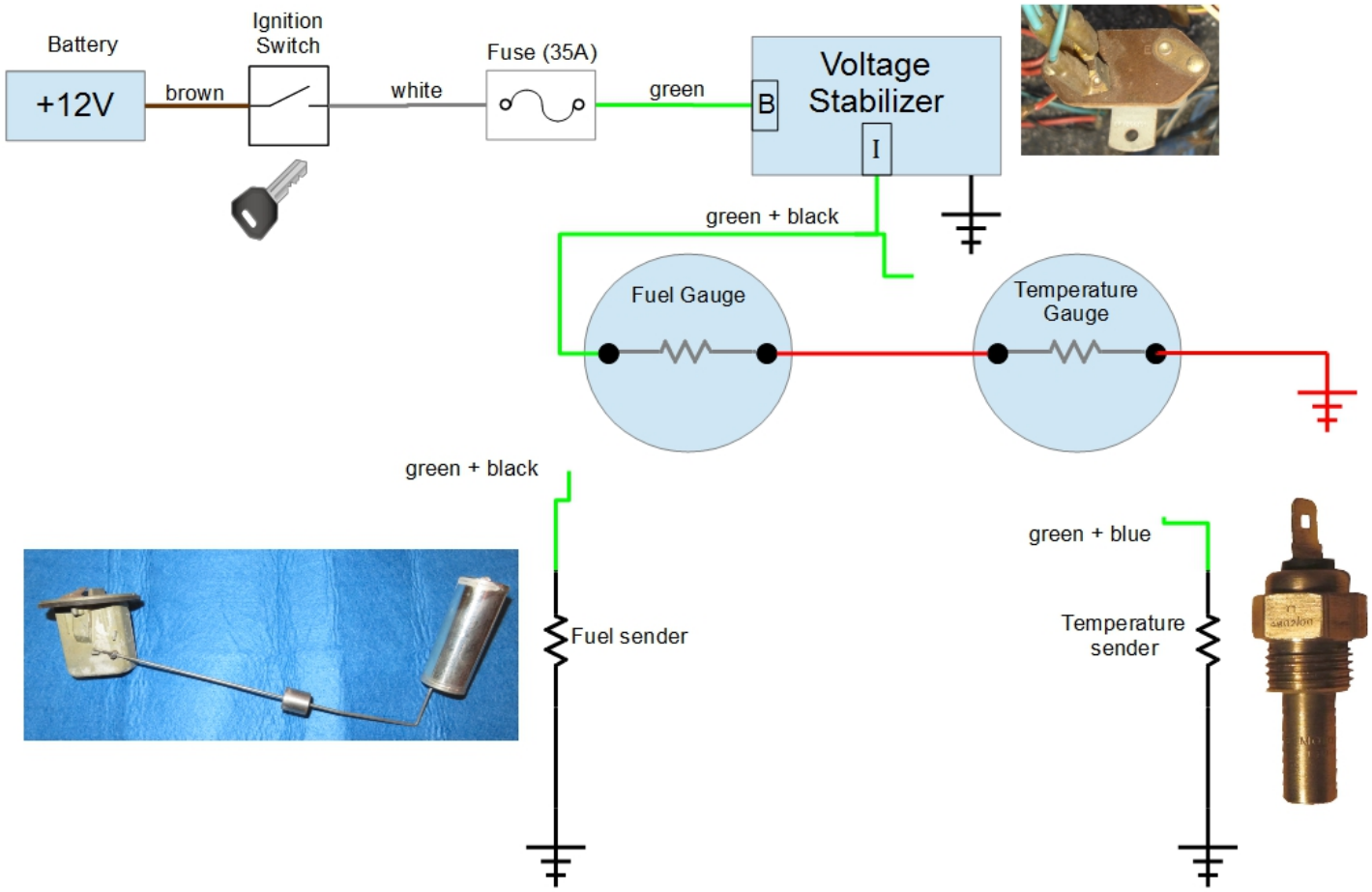

Illustration 4: Gauges wired in series

The order of the gauges in the series wiring does not matter. When the ignition is turned on, both gauges should read slightly to the right of mid-point. The temperature gauge should be around 88ºC and the fuel gauge should be around 5.75 gallons. See photo below. Remember to disconnect the supply to the ignition coil (to prevent cooking the coil).

Illustration 5: Series IV gauges wired in series to each other

Gauge Accuracy

You can check the accuracy of the gauge by replacing the sender with specific resistance values and then observe the resulting needle position. The series IV gauges have two small dots for calibrating the low and high reading and a dash for the mid-point. The series V gauges have two small dots at low, mid, and high.

Illustration 6: Calibration marks series IV gauge

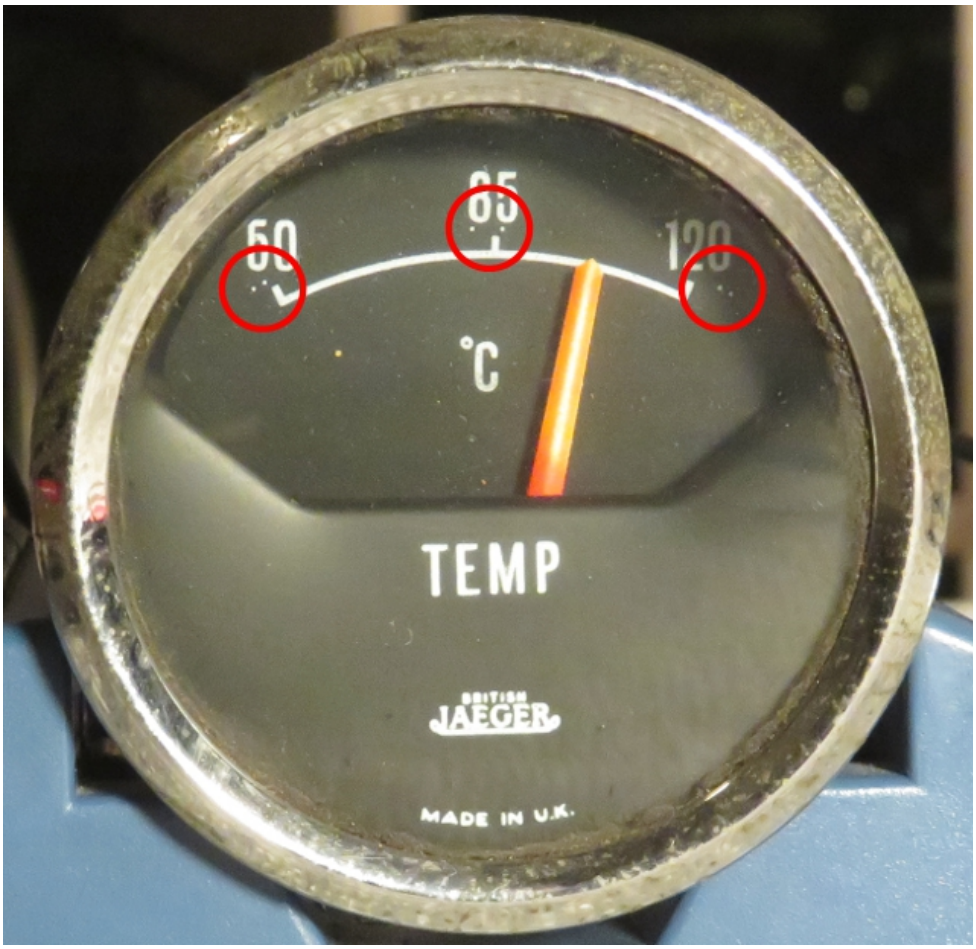

Illustration 7: Calibration marks series V gauge

Here are the resistances to use to check the gauge accuracy.

Resistance (Ohms)	**Gauge Reading**
228	Low dots
68	Mid point
43	100ºC / 212ºF or ~7.75 gallons
22	High dots

Illustration 8: Series IV fuel gauge with 43 Ohm sender resistance

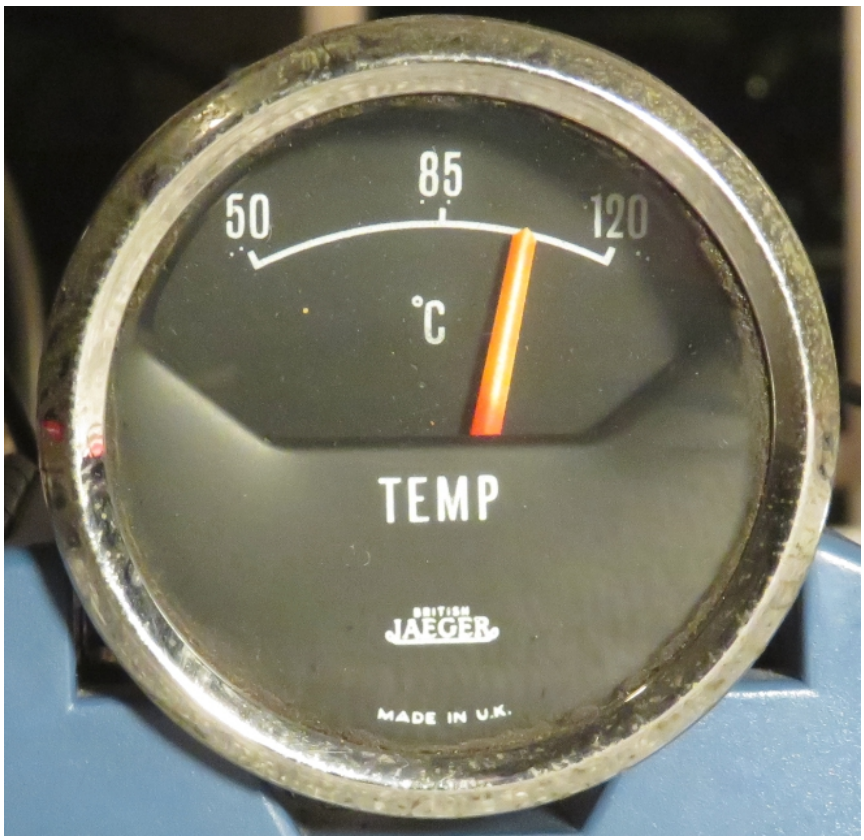

Illustration 9: Series V temperature gauge with 43 Ohm sender resistance

The accuracy checks can be done while the gauge is in the dash. Probably the easiest way to provide the different resistances for testing the gauge is to get a 1K Ohm potentiometer. If using an original voltage stablizer, use a potentiometer rated at 1 Watt or higher. If using a solid state voltage stabilizer, use a potentiometer rated at 0.5 Watt or higher. With the potentiometer not connected to anything, measure the resistance at two of the three connectors on the potentiometer, and turn the dial to the desired resistance. If you struggle to dial in the resistance you want, try a different pair of connectors. Then connect one of those connectors to the gauge (in place of the sender connection) and ground the other connector on the potentiometer. Then perform the test.

1. Disconnect the supply to the ignition coil (to prevent cooking the coil).
2. Turn the ignition on.
3. Observe the needle position against the expected position given in the prior table.

Two things to note with this test:

1. Original voltage stabilizer – when cold, the stabilizer will deliver a bit more energy than when it is warmed up. So you may see the gauge needle read a bit higher than expected initially. Then even though the stabilizer warms up and reduces the energy being delivered to the gauge, the gauge needle really doesn't react to the slight bit of cooling. So here's how to get an accurate reading. Leave the ignition on for a couple of minutes to warm up the stabilizer. Then turn off the ignition off for 5 to 10 seconds to allow the gauge needle to move left. Then turn the ignition back on. The gauge should slowly settle into a stable reading. Also, lightly tapping the gauge can help the needle to settle into position.
2. Solid state stabilizer – Once the ignition has been on for a couple of minutes, lightly tap the gauge to get the needle to settle into position.

If you find the gauge accuracy is off, you can perform adjustments as below.

Gauge Adjustment

Caution: It is easy to mess up the gauge accuracy using the adjustment capability. Making adjustments takes patience, a steady hand, and some trial & error. If your gauge is fairly accurate, you should probably leave it alone.

There are slots on the back of the gauge that can be used to adjust the gauge readings. The adjustment is done using the two round slots in the rear of the gauge. The slots do not rotate, they move side-to-side (towards the center or towards the outside). The adjustment slots are normally covered with a cork or paper plug to keep moisture and bugs out, but the plugs can be easily removed. Be sure to replace these plugs with something else, such as a dab of silicone seal (RTV), or use a 1/4” hole punch and a 1/16” thick rubber washer to create a 1/4” rubber plug. The slots are actually slots in a lever assembly. One adjustment slot affects mostly the low end of the scale and the other adjustment slot affects the high end, although there is some interaction between the two. I recommend removing the gauge from the dash to make adjustments.

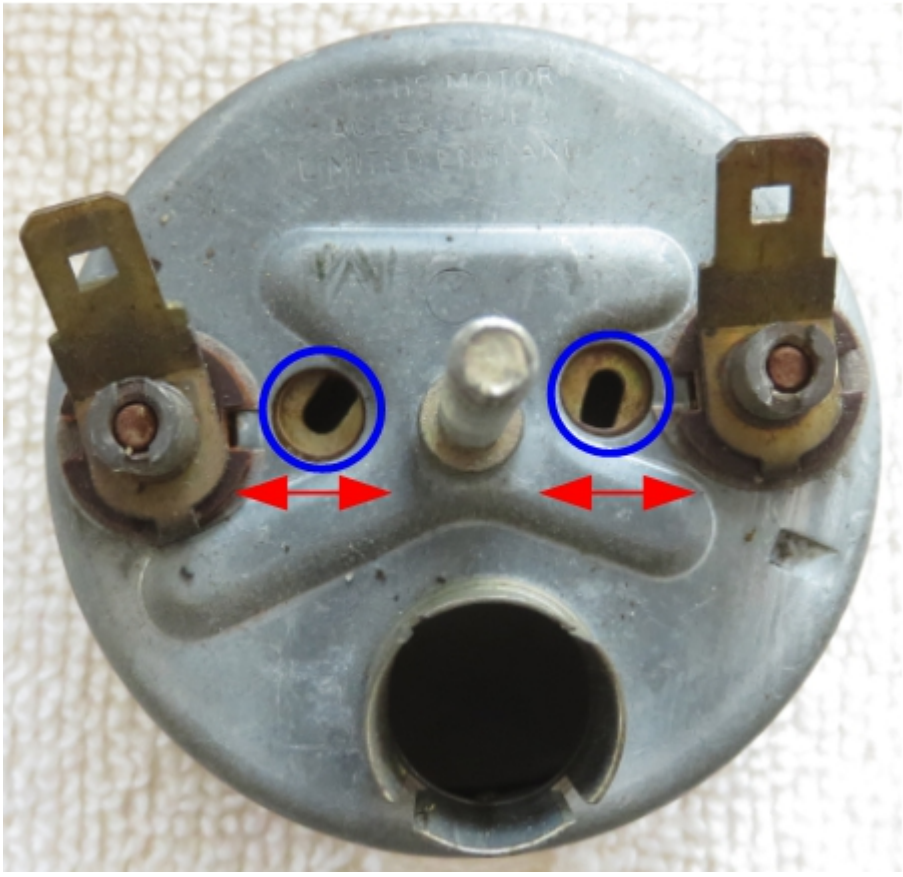

Gauge internals

Pushing the slot in a direction adjusts the needle position in the same direction. For example:

- Moving the 'high end' slot towards the outside of the gauge will adjust the needle to read higher when in the high end range.
- Moving the 'high end' slot towards the center of the gauge will adjust the needle to read lower when in the high end range.
- Moving the 'low end' slot towards the outside of the gauge will adjust the needle to read lower when in the low end range.
- Moving the 'low end' slot towards the center of the gauge will adjust the needle to read higher when in the low end range.

Remember there is some interaction between an adjustment slot and the opposite end range.

First, do any adjustments necessary to get accurate readings for the low calibration dots and high calibration dots. Each time an adjustment is made by moving a slot, check both the low and high dots again. Once the gauge is accurate for the low and high dots, then check the mid-point reading and also check the 43 Ohm reading (100ºC / 212ºF or ~7.75 gallons), if desired.

Once the gauge is adjusted to your satisfaction, don't forget to re-cover the adjustment slots to keep dirt, dust, and bugs out.

Gauge Housing Ground

The gauge housing needs a ground for the internal light bulb only. The gauge housing ground is not relevant to the operation of the gauge.

Temperature Sender

Info from **Standard Motor Products**: The information we have about this part is that at 25ºC = 650 ohms and at 100ºC = 43 ohms. The Thread is 5/8” UNF and it replaces Smiths TT-4802/00A

Summary of temps & resistances:

Temperature	**Resistance (Ohms)**	**Source**
25ºC / 77ºF	650	Standard Motor Products
60ºC / 140ºF	155	Mike H – empirical using a calibrated gauge
76.7ºC / 170ºF	91	Mike H – empirical using a calibrated gauge
85ºC / 185ºF	68	Tom H – calculated from empirical current measurement of four gauges; validated by Mike H using two gauges
100ºC / 212ºF	43	Standard Motor Products

Test by measuring resistances at various temperatures, either in car or out of car.
In car, use an infrared laser thermometer to verify the sender housing temperature.

- Note: With the car running, many digital multi-meters will give an incorrect resistance measurement due to current flow.
- Disconnect the green + blue wire at the temperature sender.
- Measure the resistance from the sender connector to its housing and compare against values in the table above.

Out of car, put the sender into a pot of water on the stove. Submerge just the bottom portion of the sender. Don't allow the sender touch the bottom of the pot. Slowly heat the water, checking the temperature with a thermometer. Measure the resistance from the sender connector to its housing and compare against values in table above.

The temperature sender gets its ground through the engine. The engine is grounded via a braided cable normally mounted at a gearbox mount. Verify the resistance from the sender housing to a chassis ground point is only a few ohms.

Fuel Sender

Fuel Sender Unit resistances (from Tom Hayden):
The resistance at gauge appears to be 228 ohms at 0 Gal, 68 ohms at 4.5 Gal, and 22 ohms at 11+ Gal.
I measured the fuel sender resistance and it varied from 13 ohms at one stop to 235 ohms at the other stop.

Series V gauges, using the Low, Mid, and Full cal dots for measuring:

Low - 34.9 mA (avg based on 4 gauges reading betw 33.6 and 36.3 mA)
Mid - 78.0 mA (avg of 4 betw 76.4 and 80.5)
Full - 121.8 mA (avg of 4 betw 120 and 124)

Assuming a 10.1 volt source, for an original voltage stabilizer, this correlates to sender resistances of
Low - 228 ohms

Mid - 68 ohms
Full - 22 ohms

All 4 gauges were 61 ohms internally.

Fuel senders typically have one of two issues:

1. The wiper arm does not make contact with the wire winding.
2. Bad ground.

Folks have indicated the fuel sender can be removed from the gas tank without removing the gas tank.

See this document for adding an explicit ground connection to the fuel sender. The document also indicates an option for increasing the pressure of the wiper arm onto the wire winding.
http://mhartman.net/files/sunbeam/fuel%20sender%20ground.pdf